KENWOOD

INSTRUCTION MANUAL

144/440 MHz FM DUAL BANDER

TM-D710A

144/430 MHz FM DUAL BANDER

TM-D710A/ TM-D710E

Only basic operations are explained in this instruction manual. For a detailed explanation on the operations, refer to the PDF file supplied on the CD-ROM.

This equipment complies with the essential requirements of Directive 1999/5/EC.
The use of the warning symbol ⓘ means the equipment is subject to restrictions of use in certain countries.
This equipment is intended for use in all EU countries and CH, LI, IS and NO, and requires a license.

Kenwood Corporation

© B62-1986-00 (K, E, M4)
09 08 07 06 05 04 03 02 01 00

CE 0682 ⓘ

THANK YOU

We are grateful you decided to purchase this **Kenwood** FM transceiver. **Kenwood** always provides Amateur Radio products which surprise and excite serious hobbyists. This transceiver is no exception. **Kenwood** believes that this product will satisfy your requirements for both voice and data communications.

FEATURES

This transceiver has the following main features:

- Has a built-in TNC which conforms to the AX.25protocol. With a portable computer, allows you to enjoy Packet operation quite easily.
- Includes a program for dealing with data formats supported by Automatic Packet/ Position Reporting System (APRS®).
- Enhanced Programmable Memory (PM) channels store virtually entire current operating environments for your quick recall.
- Contains a total of 1000 Memory channels to program frequencies and other various data. Allows each Memory channel to be named using up to 8 alphanumeric characters.
- Continuous Tone Coded Squelch System (CTCSS) or Digital Code Squelch (DCS) rejects unwanted calls from other stations.

WRITING CONVENTIONS FOLLOWED IN THIS MANUAL

The writing conventions described below have been followed to simplify instructions and avoid unnecessary repetition.

Instruction	Action
Press [KEY].	Momentarily press KEY.
Press [KEY] (1s).	Press and hold KEY for 1 second or longer.
Press [KEY1], [KEY2].	Press KEY1 momentarily, release KEY1, then press KEY2.
Press [F], [KEY].	Press the F key to enter Function mode, then press KEY to access its secondary function.
Press [KEY] + Power ON.	With the transceiver power OFF, press and hold KEY while turning the transceiver power ON.

Information on Disposal of Old Electrical and Electronic Equipment (applicable for EU countries that have adopted separate waste collection systems)

Products with the symbol (crossed-out wheeled bin) cannot be disposed as household waste. Old electrical and electronic equipment should be recycled at a facility capable of handling these items and their waste byproducts. Contact your local authority for details in locating a recycle facility nearest to you. Proper recycling and waste disposal will help conserve resources whilst preventing detrimental effects on our health and the environment.

NOTICES TO THE USER

One or more of the following statements may be applicable:

FCC WARNING

This equipment generates or uses radio frequency energy. Changes or modifications to this equipment may cause harmful interference unless the modifications are expressly approved in the instruction manual. The user could lose the authority to operate this equipment if an unauthorized change or modification is made.

INFORMATION TO THE DIGITAL DEVICE USER REQUIRED BY THE FCC

This equipment has been tested and found to comply with the limits for a Class B digital device, pursuant to Part 15 of the FCC Rules. These limits are designed to provide reasonable protection against harmful interference in a residential installation.

This equipment generates, uses and can generate radio frequency energy and, if not installed and used in accordance with the instructions, may cause harmful interference to radio communications. However, there is no guarantee that the interference will not occur in a particular installation. If this equipment does cause harmful interference to radio or television reception, which can be determined by turning the equipment off and on, the user is encouraged to try to correct the interference by one or more of the following measures:

- Reorient or relocate the receiving antenna.
- Increase the separation between the equipment and receiver.
- Connect the equipment to an outlet on a circuit different from that to which the receiver is connected.
- Consult the dealer for technical assistance.

WHEN CONDENSATION OCCURS INSIDE THE TRANSCEIVER

Condensation may occur inside the transceiver in such a case where the room is warmed using a heater on cold days or where the transceiver is quickly moved from a cold room to a warm room. When condensation occurs, the microcomputer and/or the transmit/receive circuits may become unstable, resulting in transceiver malfunction. If this happens, turn OFF the transceiver and just wait for a while. When the condensation droplets disappear, the transceiver will function normally.

WARNING

- EXPLOSIVE ATMOSPHERES (GASES, DUST, FUMES, etc.)

  Turn OFF your transceiver while taking on fuel or while parked in gasoline service stations. Do not carry spare fuel containers in the trunk of your vehicle if your transceiver is mounted in the trunk area.
- INJURY FROM RADIO FREQUENCY TRANSMISSIONS

  Do not operate your transceiver when somebody is either standing near to or touching the antenna, to avoid the possibility of radio frequency burns or related physical injury.
- DYNAMITE BLASTING CAPS

  Operating the transceiver within 150 m (500 feet) of dynamite blasting caps may cause them to explode. Turn OFF your transceiver when in an area where blasting is in progress, or where “TURN OFF TWO-WAY RADIO” signs have been posted. If you are transporting blasting caps in your vehicle, make sure they are carried in a closed metal box with a padded interior. Do not transmit while the caps are being placed into or removed from the container.

PRECAUTIONS

Observe the following precautions to prevent fire, personal injury, and transceiver damage.

- When operating mobile, do not attempt to configure the transceiver while driving; it is too dangerous.
- Do not transmit with high output power for extended periods. The transceiver may overheat.
- Do not disassemble or modify the transceiver for any reason, unless instructed by this manual or by **Kenwood** documentation.
- Do not expose the transceiver to long periods of direct sunlight, nor place it near heating appliances.
- Do not place the transceiver in excessively dusty, humid, or wet areas, nor on unstable surfaces.
- If an abnormal odor or smoke is detected coming from the transceiver, switch the transceiver power off immediately, and contact a **Kenwood** service station or your dealer.
- Use of the transceiver while you are driving may be against traffic laws. Please check and observe the vehicle regulations in your area.
- Do not use options not specified by **Kenwood**.

CAUTION

- The transceiver is designed for a 13.8 V DC (±15%) power source! Never use a 24 V battery to power the transceiver. Check the battery polarity and voltage of the vehicle before installing the transceiver.
- Use only the supplied DC power cable or a Kenwood optional DC power cable.
- Do not insert metal objects into the cooling fan.

WARNING

- Do not cut and/or remove the fuse holder on the DC power cable. Improper connections and/or current surges may cause smoke or fire.
- For passenger safety, install the transceiver securely using the supplied mounting bracket and screw set so the transceiver will not break loose in the event of a collision.
- Various electronic equipment in your vehicle may malfunction if they are not properly protected from the radio frequency energy which is present while transmitting. Electronic fuel injection, anti-skid braking, and cruise control systems are typical examples of equipment that may malfunction. If your vehicle contains such equipment, consult the dealer for the make of vehicle and enlist his/her aid in determining if they will perform normally while transmitting.

CONTENTS

PREPARATION 1
SUPPLIED ACCESSORIES 1
MOBILE INSTALLATION 2
TX/RX Unit Installation 2
Operation Panel Installation 3
Power Cable Connection 3
FIXED STATION 4
Operation Panel Installation 4
Power Cable Connection 5
REPLACING FUSES 6
OPERATION PANEL AND MICROPHONE CONNECTION 6
ANTENNA CONNECTION 7
ACCESSORY CONNECTIONS 7
External Speakers 7
GETTING ACQUAINTED 8
OPERATION PANEL (FRONT) 8
OPERATION PANEL (REAR & LEFT) 10
DISPLAY 12
TX/ RX UNIT REAR PANEL 14
TX/ RX UNIT SUB-PANEL 14
MICROPHONE (MC-59) 15
BASIC OPERATIONS 16
SWITCHING THE POWER ON/ OFF 16
ADJUSTING THE VOLUME 16
ADJUSTING THE SQUELCH 17
SELECTING A BAND 17
SELECTING DUAL BAND MODE/ SINGLE BAND MODE 18
SELECTING A FREQUENCY BAND 19
SELECTING AN OPERATING MODE 20
VFO Mode 20
Memory Channel Mode 21
Call Channel Mode 21
TRANSMITTING 22
MENU MODE 23
MENU ACCESS 23
MENU CONFIGURATION 24
CHARACTER ENTRY 34
OPTIONS 36
MEMORY CONTROL PROGRAM MCP-2A 36
CONNECTING THE PG-5G/ PG-5H INTERFACE CABLES 37

CONNECTING THE PG-5F EXTENSION CABLE 38
INSTALLING THE VGS-1 UNIT..... 39
MAINTENANCE 40
GENERAL INFORMATION..... 40
SERVICE 40
SERVICE NOTE 40
CLEANING 40
TROUBLESHOOTING..... 41
SPECIFICATIONS..... 43

For a detailed explanation on the operation, refer to the PDF file supplied on the CD-ROM.

Operation	File name
CONTENTS	00-CONTENTS-E.pdf
OPERATING THROUGH REPEATERS	01-REPEATER-E.pdf
MEMORY CHANNELS	02-MEMORY CHANNEL-E.pdf
PROGRAMMABLE MEMORY (PM)	03-PM CHANNEL-E.pdf
SCAN	04-SCAN-E.pdf
CONTINUOUS TONE CODED SQUELCH SYSTEM (CTCSS)	05-CTCSS-E.pdf
DIGITAL CODED SQUELCH (DCS)	06-DCS-E.pdf
DUAL TONE MULTI-FREQUENCY (DTMF)	07-DTMF-E.pdf
EchoLink®	08-EchoLink-E.pdf
OTHER OPERATIONS	09-OTHER OPERATIONS-E.pdf
PACKET OPERATION	10-PACKET-E.pdf
APRS®	11-APRS-E.pdf
TRANSCEIVER RESET	12-RESET-E.pdf
VGS-1 (OPTIONAL) OPERATION	13-VGS-E.pdf
CROSS-BAND/ LOCKED-BAND OPERATION (K TYPE MODELS ONLY)	14-CROSS BAND (K TYPE)-E.pdf
WIRELESS OPERATION (K TYPE MODELS ONLY)	15-WIRELESS (K TYPE)-E.pdf
WEATHER ALERT (K TYPE MODELS ONLY)	16-WEATHER ALERT (K TYPE)-E.pdf
SKY COMMAND (K TYPE MODELS ONLY)	17-SKY COMMAND (K TYPE)-E.pdf

Note: Operations file is available in PDF file format. To read the file, you must use Adobe Reader.

SUPPLIED ACCESSORIES

Note: A market area code (K, E, or M4) can be found on the label attached to the package box.

Item		Part Number	Quantity
Microphone		T91-0657-XX	1
Microphone hanger		J19-1584-XX	1
DC power cable (with 20 A fuses)	K, M4 types	E30-7628-XX	1
	E type	E30-3452-XX	1
Mounting bracket		J29-0628-XX	1
Screw set		N99-2055-XX	1
Modular plug cable (for PANEL jacks)		E30-7639-XX	1
Line filter		L79-1417-XX	2
Cable with a 2.5 mm (1/10") 3-conductor plug (for GPS jack)		E30-3400-XX	1
Base stand		J09-0409-XX	1
Panel holder		J29-0663-XX	1
Panel bracket		J29-0707-XX	1
Fuse (15 A)	K, M4 types	F51-0079-XX	1
	E type	F52-0024-XX	1
Warranty Card	K, E types only	——	1
Instruction manual		B62-1986-XX	1
CD-ROM (For a detailed explanation on the operation)		T93-0131-XX	1

MOBILE INSTALLATION

■ TX/ RX Unit Installation

Select a safe, convenient location inside your vehicle that will minimize danger to your passengers and yourself while the vehicle is in motion. Consider installing the transceiver under the dash in front of the passenger seat so that knees or legs will not strike the radio during sudden braking of your vehicle. Try to a pick well-ventilated location that is shielded from direct sunlight.

Note: You may experience interference on your GPS receiver when using in or around 438.8 MHz (A band) and/or 443.8 MHz (B band). To eliminate the interference, ensure that the transceiver is installed at a location separate from your GPS receiver.

1 Install the mounting bracket in the vehicle using the supplied self-tapping screws and flat washers (4 of each are supplied).

- The bracket can be mounted with the bracket opening facing down, for under dash mounting, or facing up.
- The bracket must be installed so that the 3 screw slots on the edge of each bracket side are facing the back.

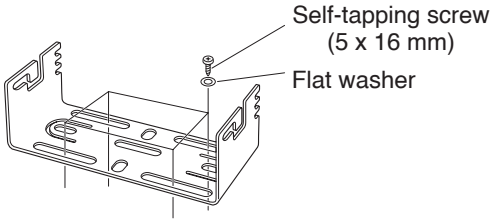

2 Position the transceiver, then insert and tighten the supplied hexagon SEMS screws and flat washers (4 of each are supplied, 2 for each side of the bracket).

- Ensure that all hardware is tightened, to prevent vehicle vibration from loosening the bracket or TX/ RX unit.

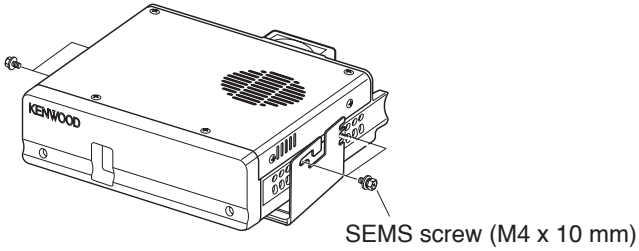

- Set an appropriate angle for the TX/ RX unit, using the 3 screw slots on the rear edge of each bracket side.

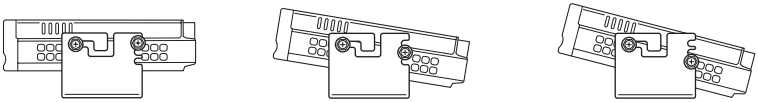

■ Operation Panel Installation

1 Clean and dry the installation location.

> ⚠ CAUTION
> Do not install the bracket close to an air bag.

2 Remove the release paper from the base of the panel bracket, then secure it in place using the 3 supplied self-tapping screws.

- Allow the panel to set for a while, to ensure it remains fast. Otherwise, vibrations may occur.
- After removing the release paper, it cannot be reused.

3 Attach the panel holder to the panel bracket using the 2 supplied SEMS screws.

4 Attach the operation panel to the panel holder so that it locks in place.

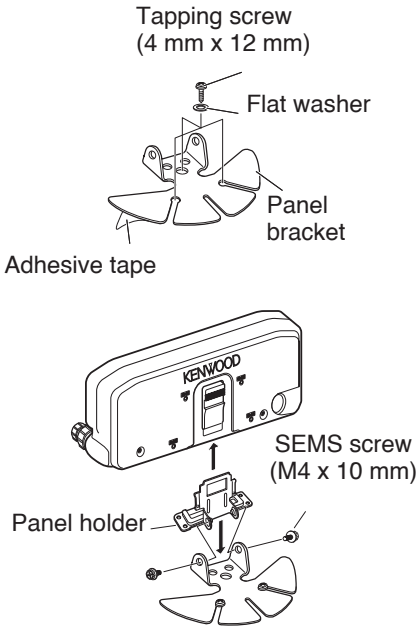

■ Power Cable Connection

Be sure to use a 12 V vehicle battery that has sufficient current capacity. If the current to the transceiver is insufficient, the display may darken during transmission or the transmit output power may drop excessively. Never connect the transceiver to a 24 V battery.

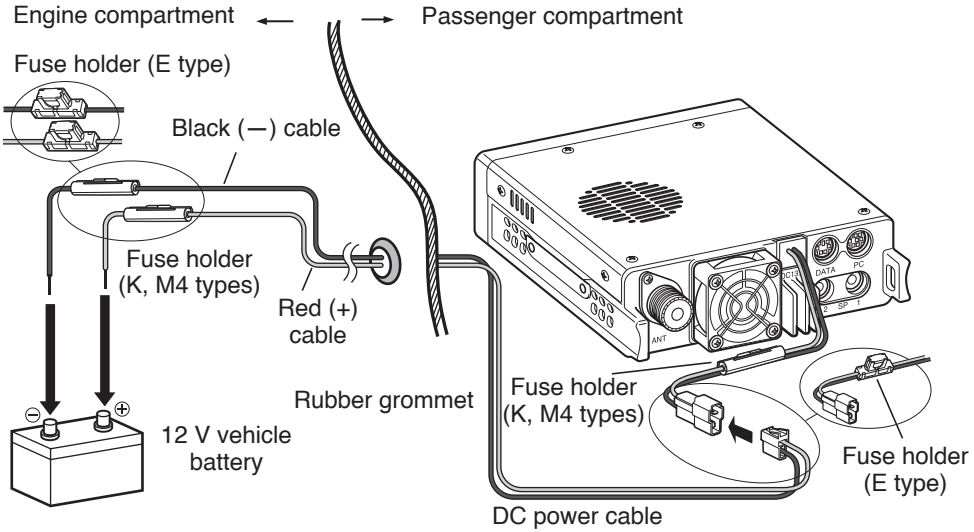

Note: If you use the transceiver for a long period when the vehicle battery is not fully charged or when the engine is OFF, the battery may become discharged and will not have sufficient reserves to start the vehicle. Avoid using the transceiver under these conditions.

1 Route the DC power cable supplied with the transceiver directly to the vehicle's battery terminals using the shortest path from the transceiver.
   - When using a noise filter, it should be installed with an insulator to prevent it from touching metal on the vehicle.
   - We do not recommend using a cigarette lighter socket as some cigarette lighter sockets introduce an unacceptable voltage drop.
   - If the power cable must be routed through a hole in the vehicle chassis or body, for example in the fire wall at the front of the passenger compartment, use a rubber grommet to protect the cable from abrasion. Dismantle the fuse holder to pass the cable through the fire wall.
   - The entire length of the cable must be dressed so it is isolated from heat, moisture, and the engine secondary (high voltage) ignition system/ cables.

2 After the cable is in place, wind heat-resistant tape around the fuse holder to protect it from moisture. Tie down the full run of cable.

3 To prevent the risk of short circuits, disconnect other wiring from the negative (–) battery terminal before connecting the transceiver.

FIXED STATION

■ Operation Panel Installation

1 Attach the panel holder to the base stand using the 2 supplied SEMS screws.

2 Attach the operation panel to the panel holder so that it locks in place.

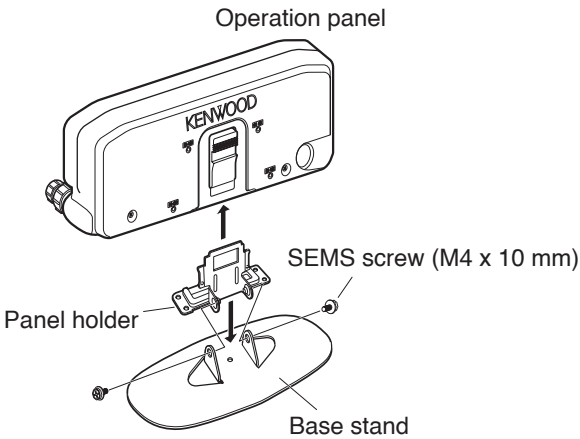

■ Power Cable Connection

In order to use this transceiver for fixed station operation, you will need a separate 13.8 V DC power supply that must be purchased separately. The recommended current capacity of the power supply is 13 A.

Note: Do not plug the DC power supply into an AC outlet until you make all connections.

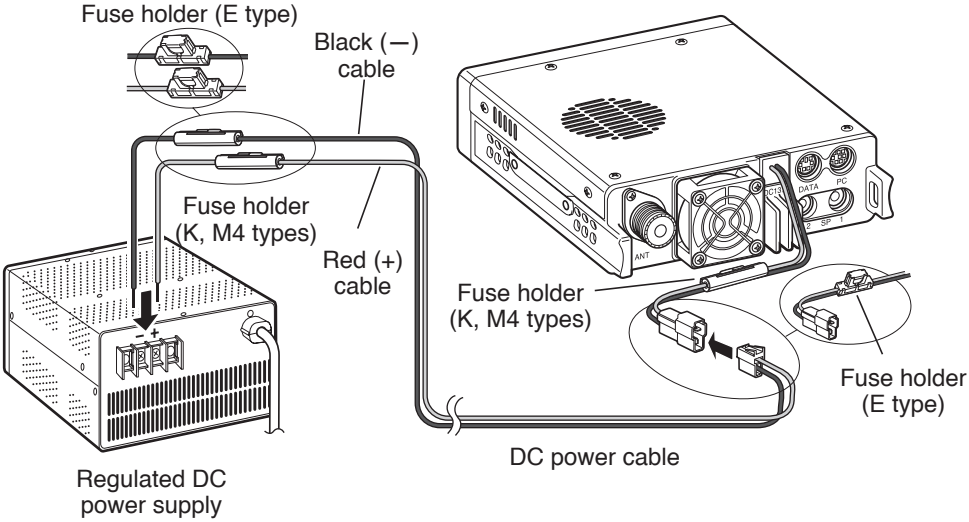

1 Ensure that the transceiver and DC power supply are both OFF.

2 Connect the DC power cable to the regulated DC power supply and ensure that the polarities are correct (Red: positive, Black: negative).

- Use the supplied DC power cable to connect the transceiver to a regulated power supply. Do not directly connect the transceiver to an AC outlet.
- Do not substitute the cable with smaller gauge wires.

3 Connect the DC power cable to the transceiver.

- Press the connectors firmly together until the locking tab clicks.

Note: For your transceiver to fully exhibit its performance capabilities, we recommend using an optional PS-33 (20.5 A, 25% duty cycle) power supply.

REPLACING FUSES

If the fuse blows, determine the cause, then correct the problem. After the problem is resolved, replace the fuse. If newly installed fuses continue to blow, disconnect the power cable and contact your authorized **Kenwood** dealer or an authorized **Kenwood** service center for assistance.

Fuse Location	Fuse Current Rating
Transceiver (located on the DC connector)	15 A
Supplied DC power cable	20 A

CAUTION

Only use fuses of the specified type and rating; otherwise the transceiver could be damaged.

Fuse holder (E type)

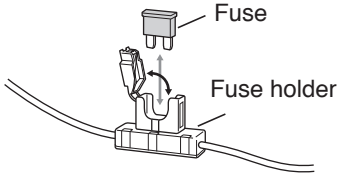

Fuse holder (K, M4 types)

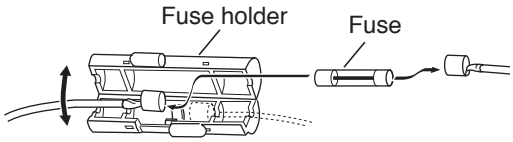

OPERATION PANEL AND MICROPHONE CONNECTION

Plug the microphone plug to the MIC jack, then connect the Operation panel to the TX/ RX unit with the supplied cable.

- Attach the microphone hanger to an appropriate position using the screws included in the screw set.

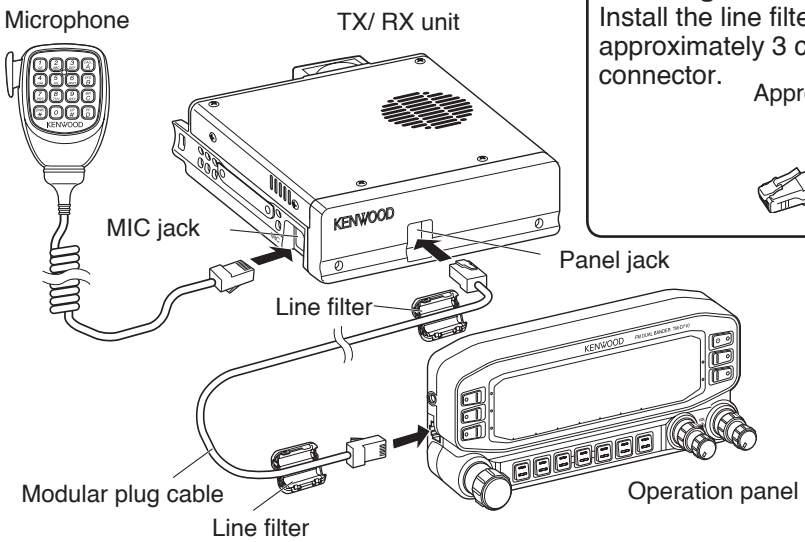

Installing the Line Filter

Install the line filter approximately 3 cm from the connector.

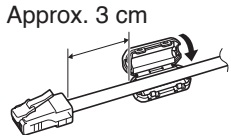

ANTENNA CONNECTION

Before operating, you must first install an efficient, well-tuned antenna. The success of your installation will depend largely on the type of antenna and its correct installation. The transceiver can give excellent results if the antenna system and its installation are given careful attention.

Use a low-loss coaxial feed line that also has a characteristic impedance of 50 Ω, to match the transceiver input impedance. Coupling the antenna to the transceiver via feed lines having an impedance other than 50 Ω reduces the efficiency of the antenna system and can cause interference to nearby broadcast television receivers, radio receivers, and other electronic equipment.

CAUTION

◆ Transmitting without first connecting an antenna or other matched load may damage the transceiver. Always connect the antenna to the transceiver before transmitting.

◆ All fixed stations should be equipped with a lightning arrester to reduce the risk of fire, electric shock, and/or transceiver damage.

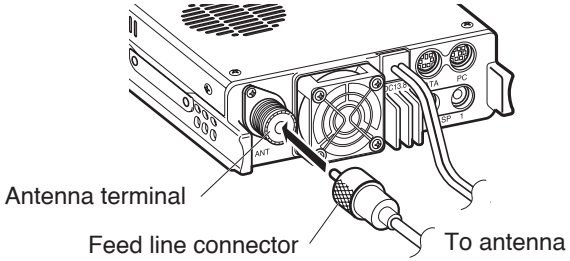

ACCESSORY CONNECTIONS

■ External Speakers

If you plan to use external speakers, choose speakers with an impedance of 8 Ω. The external speaker jacks accept a 3.5 mm (1/8”) mono (2-conductor) plug. We recommend using SP-50B speakers.

There are 2 speaker jacks on the rear of the transceiver: SP 1 and SP 2.

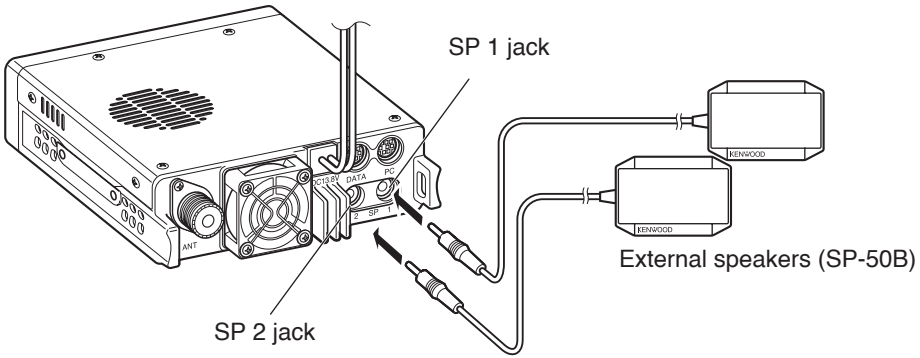

OPERATION PANEL (FRONT)

■ IN NORMAL MODE

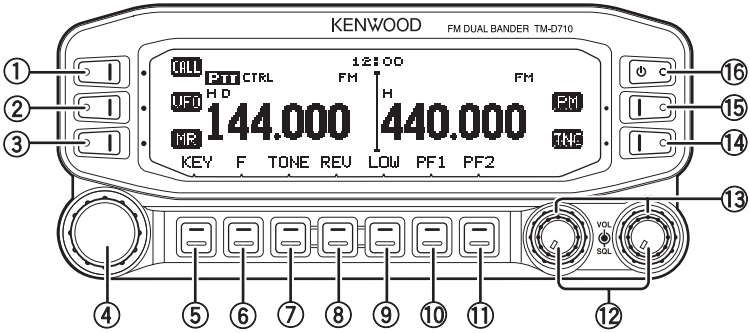

① **CALL**
Press **[CALL]** to select the Call channel.

Press **[CALL] (1s)** to start Call scan.

② **VFO**
Press **[VFO]** to enter VFO mode , then rotate the **Tuning** control to select an operating frequency.

Press **[VFO] (1s)** to start VFO scan.

③ **MR**
Press **[MR]** to enter Memory Channel mode, then rotate the **Tuning** control to select a Memory channel.

Press **[MR] (1s)** to start Memory scan.

④ **Tuning Control**
Rotate to select an operating frequency or Memory channel, change the scan direction, etc.

Press the **Tuning** control to enter MHz mode (while in VFO or Call mode) or to toggle the display between the channel name and frequency (while in Memory Channel mode).

Press **Tuning** control **(1s)** to start MHz scan or Group scan.

⑤ **KEY**
Press **[KEY]** to turn the APRS key function ON and OFF.

⑥ **F**
Press **[F]** to enter Function mode.

Press **[F] (1s)** to turn the transceiver key lock function ON and OFF.

⑦ **TONE**
Press **[TONE]** to turn the Tone function ON.

Each time you press **[TONE]** to toggle the functions as follows: Tone ON >> CTCSS ON >> DCS ON >> OFF.

⑧ **REV**
Press **[REV]** to turn the Reverse function ON or OFF.

Press **[REV] (1s)** to turn the Automatic Simplex Checker ON.

⑨ **LOW**
Press **[LOW]** to toggle the transmit output power as follows: High Power (K, E types only) –> Middle Power –> Low Power.

⑩ **PF1**
Press **[PF1]** to activate its programmable function. The default function is "Frequency Band Select".

⑪ **PF2**
Press **[PF2]** to activate its programmable function. The default function is "Operation Band Select".

⑫ **BAND SEL (VOL) Control**
Rotate the **[BAND SEL]** control to adjust the speaker volume.

Press the left **[BAND SEL]** to select the A band. Press the right **[BAND SEL]** to select the B band.

Press **[BAND SEL] (1s)** to toggle between single and dual-band mode.

⑬ **SQL Control**
Rotate the **[SQL]** control to adjust the squelch level. Clockwise opens the squelch and counterclockwise tightens the squelch.

⑭ **TNC**
Press **[TNC]** to turn built-in TNC ON and the APRS (or NAVITRA) mode ON. Each time you press **[TNC]**, the mode toggles as follows: APRS (or NAVITRA) mode ON >> PACKET mode ON >> TNC OFF.

- When the built-in TNC turns on, "OPENING TNC" appears on the display.
- When "OPENING TNC" appears on the display, the mode cannot be changed.

⑮ **PM**
Press **[PM]** to enters the PM (Programmable Memory) channel selection mode.

⑯ **⏻**

Press **[⏻]** to turn the transceiver power ON and OFF.

■ IN FUNCTION MODE

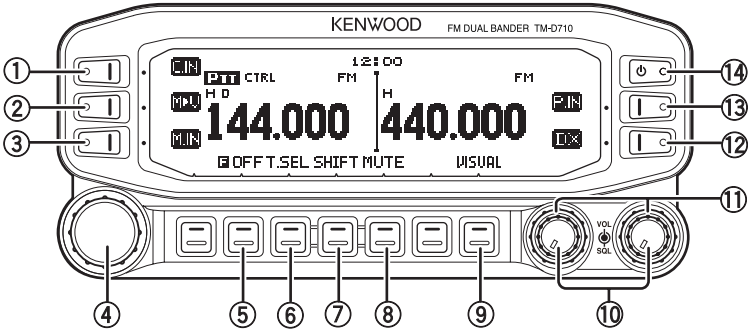

① **C.IN**
Press **[C.IN]** to store the current operating frequency to the Call channel.

② **M>V**
Press **[M>V]** to copy the current Memory channel or Call channel to the VFO (memory shift).

③ **M.IN**
Select a Memory channel, then press **[M.IN]** to store the current operating frequency in the Memory channel.

④ **Tuning Control**

Press the **Tuning** control to enter Menu mode.

⑤ **F OFF**
Press **[F OFF]** to return Normal mode.

⑥ **T.SEL**

While Tone, CTCSS, or DCS is ON, press **[T.SEL]** to enter CTCSS or DCS setup mode.

⑦ **SHIFT**

Press **[SHIFT]** to enter Offset Direction selection mode. Each time you press **[SHIFT]**, the offset direction toggles as follows:
plus (+) direction –> minus (–) direction –> –7.6 MHz (E type only) –> OFF.

⑧ **MUTE**

Press **[MUTE]** to turn the Mute function ON or OFF.

⑨ **VISUAL**
Press **[VISUAL]** to turn the Visual Scan function ON and OFF.

⑩ **BAND SEL (VOL) Control**
Rotate the **[BAND SEL]** control to adjust the speaker volume.

Press **[BAND SEL]** to select a frequency band.

⑪ **SQL Control**
Rotate the **[SQL]** control to adjust the squelch level. Clockwise opens the squelch and counterclockwise tightens the squelch.

⑫ **DX**
Press **[DX]** to turn the DX PacketClusters Monitor ON and OFF.

⑬ **P.IN**
Press **[P.IN]** to enter PM Channel registration mode.

⑭ **⏻**

Press **[⏻]** to turn the transceiver power ON and OFF.

OPERATION PANEL (REAR & LEFT)

① **GPS**
Connect the GPS receiver or the Weather Station to this jack with using supplied cable with a 2.5 mm (1/10") 3-conductor plug.

② **COM**
This terminal is for connecting to a PC. Use a PG-5G (option) cable when connecting the built-in TNC to a computer D-SUB terminal.

③ **Panel jack**
Connect the TX/ RX unit to this jack with using supplied Modular plug cable.

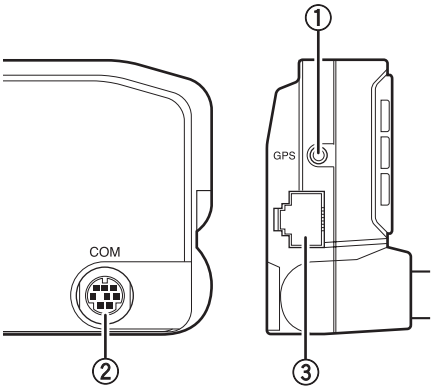

DISPLAY

< A Band > < B Band >

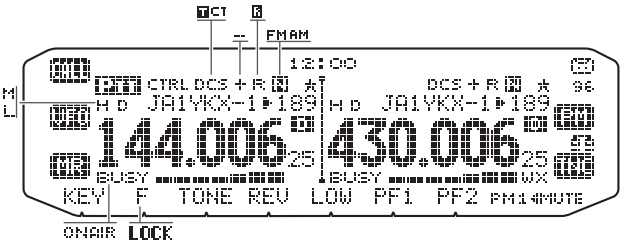

Indicator	Description
12:00	Clock display (Setting Time: Menu 525)
	Appears when there is a transmission band available. Blinks when the cross-band repeater is ON (K type only).
CTRL	Appears when there is an operation band available. Blinks when the wireless remote control is ON (K type only).
	Appears when the Tone function is ON.
CT	Appears when the CTCSS function is ON.
DCS	Appears when the DCS function is ON.
+	Appears when the Shift function is set to plus.
--	Appears when the Shift function is set to minus.
R	Appears when the Reverse function is ON.
	Appears when the ASC function is ON. Blinks when the ASC function is performing an OK check.
AM	Appears while in AM mode.
FM	Appears while in FM mode.
	Appears while in Narrow FM mode.
▶	Appears when the selected channel is registered while in Memory Input mode.

Indicator	Description
189	Displays the Memory channel and Menu number.
*	Appears when the Memory Channel Lockout function is ON.
H	Appears while using High output power. Blinks when the temperature protection circuit turns on (K, E types only).
M	Appears while using Middle output power. Blinks when the temperature protection circuit turns on.
L	Appears while using Low output power.
144.006 25	Displays the operating frequency.
BUSY	Appears when receiving a busy signal.
	Performs as an S meter when receiving a signal and displays the selected power level while transmitting.
ONAIR	Appears while transmitting.
D	Appears while using the External data band.
D	Appears while using the Internal data band.
96	Appears when the data terminal is set as 9600 (bps).
MUTE	Appears when mute function is ON.
	Appears while making a conversation recording.
	Appears while in EchoLink Sysop mode.
LOCK	Appears when the Key Lock function is ON.
PM14	Blinks when recalling a PM channel.
WX	Appears when Weather Alert is ON. Blinks when receiving a signal (K type only).

TX/ RX UNIT REAR PANEL

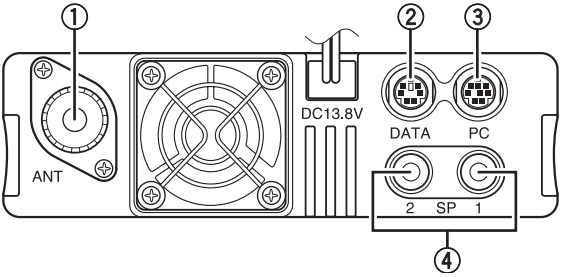

① **ANT**
Connect an M-type (TM-D710A) or N-type (TM-D710E) external antenna to this terminal. When making test transmissions, connect a dummy load in place of the antenna. The antenna system or load should have an impedance of 50 Ω.

② **DATA**
This is the data input/output terminal. Use a PG-5H (option) data communications cable when connecting to the PC voice input/output terminal.

③ **PC**
This terminal is for connecting to a PC. Use a PG-5G (option) cable or a PG-5H (option) serial communications cable when connecting to a computer D-SUB terminal.

④ **SP (SP 1/ SP 2)**
If desired, connect 1 or 2 external speakers for clearer audio. These jacks accept 3.5 mm (1/8") diameter, 2-conductor plugs.

TX/ RX UNIT SUB PANEL

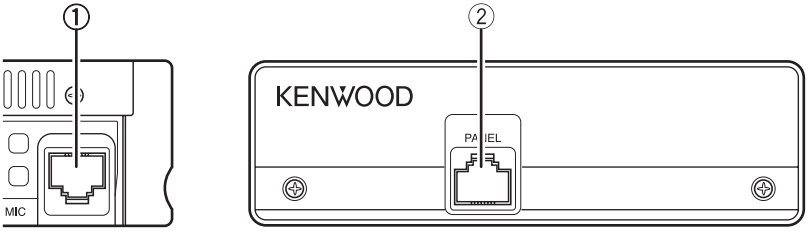

① **MIC**
Connect the supplied microphone to this jack.

② **PANEL**
Connect the Operation panel to this jack with using supplied Modular plug cable.

MICROPHONE (MC-59)

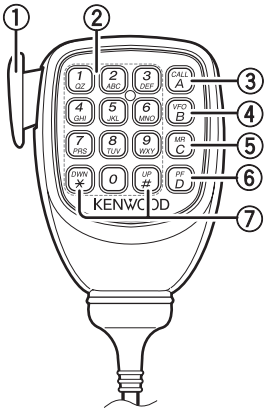

Microphone Jack

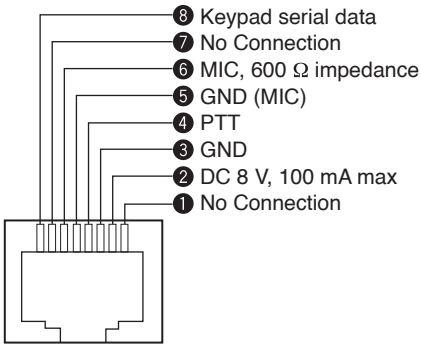

① **PTT switch**
Press and hold, then speak into the microphone to transmit.

② **DTMF keypad**
Press these keys to make DTMF calls, enter frequencies, or enter characters.

③ **CALL/ A**
Functions the same as the transceiver front panel **[CALL]** key. This is also the PF4 key and can be reprogrammed with a programmable function.

④ **VFO/ B**
Functions the same as the transceiver front panel **[VFO]** key. This is also the PF3 key and can be reprogrammed with a programmable function.

⑤ **MR/ C**
Functions the same as the transceiver front panel **[MR]** key. This is also the PF2 key and can be reprogrammed with a programmable function.

⑥ **PF/ D**
Press to toggle between bands A and B. This is also the PF1 key and can be reprogrammed with a programmable function.

⑦ **UP/ DWN**
Functions the same as the transceiver **Tuning** control.

SWITCHING THE POWER ON/ OFF

Press the **[⏻]** switch to switch the transceiver ON.

- The power on message momentarily appears on the display.
- If the transceiver power on password has been activated {Menu No.998}, you must first enter your password before you can operate the transceiver.

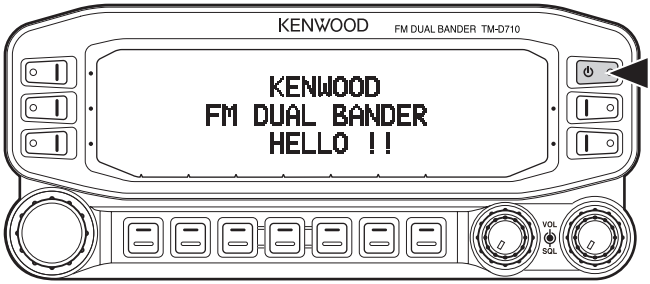

Press the **[⏻]** switch again to switch the transceiver OFF.

ADJUSTING THE VOLUME

Rotate the **[BAND SEL] (VOL)** control of your selected band clockwise to increase the volume and counterclockwise to decrease the volume.

Note: Some functions of this transceiver, such as the beep and voice announcements, have their own volume settings. Adjust those settings to your desired values.

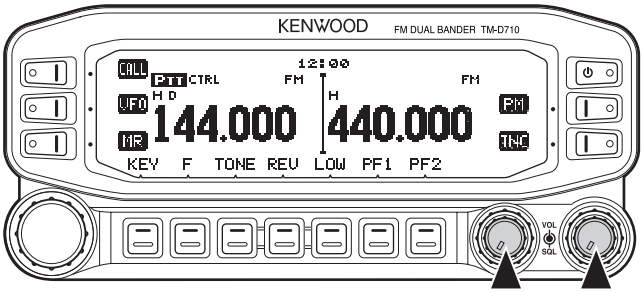

ADJUSTING THE SQUELCH

Squelch is used to mute the speaker when no signals are present. With the squelch level set correctly, you will hear sound only while actually receiving a signal. The higher the squelch level selected, the stronger the signals must be in order to hear them.

Rotate the **[SQL]** control of your selected band, when no signals are present, and select the squelch level at which the background noise is just eliminated.

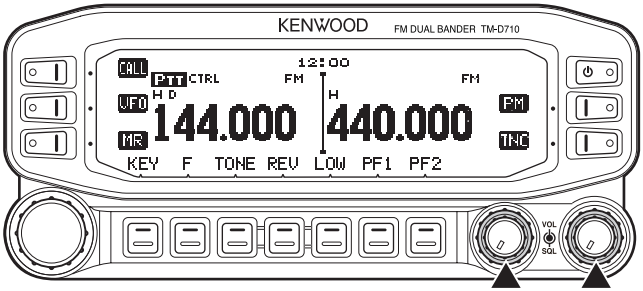

SELECTING A BAND

Press the left **[BAND SEL]** control to select band A and the right **[BAND SEL]** control to select band B.

- The CTRL icon appears at the top of the band on which you are operating and the PTT icon appears at the top of the band on which you are currently set to transmit.

Band A (left **[BAND SEL]** control):

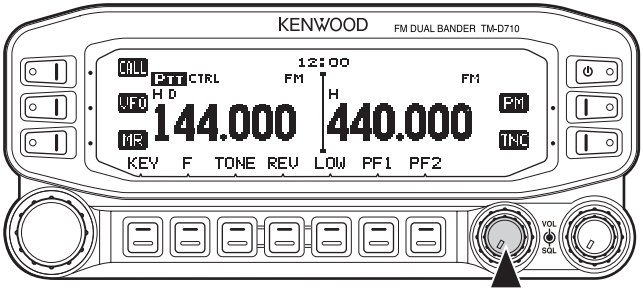

Band B (right **[BAND SEL]** control):

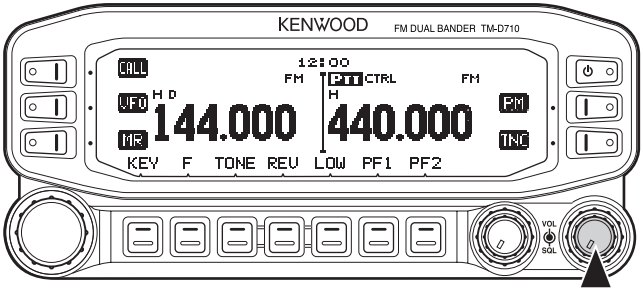

Pressing **[PF2]** allows you to switch the operating band between bands A and B, while maintaining the original band as the transmit band.

Band A is the transmit band and band B is the operating band:

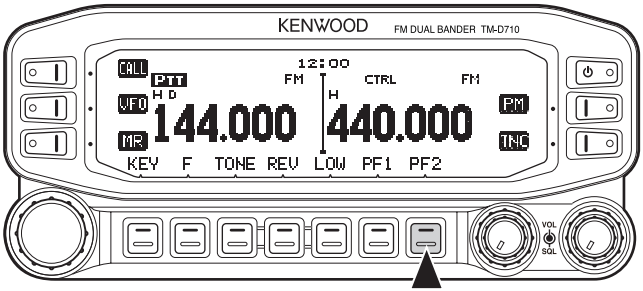

Band A is both the transmit and operating band:

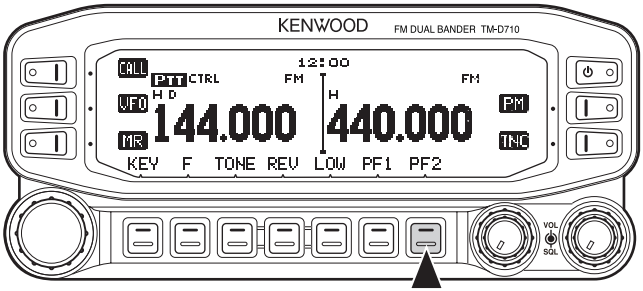

SELECTING DUAL BAND MODE/ SINGLE BAND MODE

You can switch the transceiver between dual band operation and single band operation by pressing **[BAND SEL] (1s)** of your selected band.

Dual band mode:

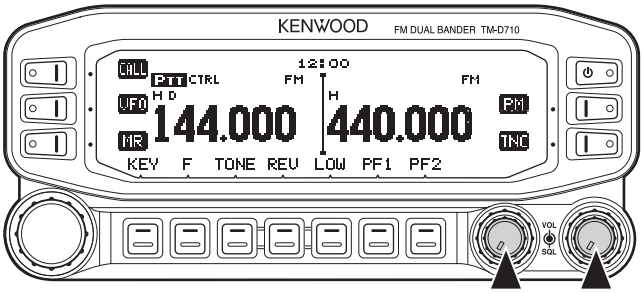

Single band mode (band A only):

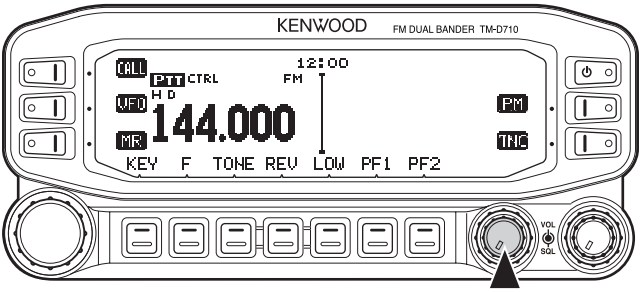

Note: You can also turn the center partition bar display off {Menu No. 527}.

SELECTING A FREQUENCY BAND

You can change the default frequency bands for bands A and B.

1 Select band A or B by pressing the **[BAND SEL]** control or **[PF2]**.

2 Press **[F], [BAND SEL]** of your selected band.

- Each time you press **[F]**, **[BAND SEL]**, you cycle to the next frequency band.
- The default setting of the **[PF1]** key also allows you to cycle to the next frequency band.
- When masking a band, you are restricted to using only the selectable band.
- When receiving 2 signals on the same band, the image interference, sensitivity, etc., performance will decrease.
- Band A: 118 >> 144 (default) >> 220 >> 300 >> 430/440 (MHz).
- Band B: 144 >> 220 >> 300 >> 430/440 (default) >> 1200 (MHz).

Note:

◆ M4 type models do not have the following frequency bands available: 118, 220, 300, or 1200 (MHz).

◆ E and M4 type models use the 430 MHz band and K type models use the 440 MHz band.

Frequency ranges:

- 118 MHz: 118 ~ 135.995 MHz
- 220 MHz: 200 ~ 299.995 MHz
- 430/440 MHz: 400 ~ 523.995 MHz
- 1200 MHz: 800 ~ 1299.990 MHz (K type: excluding cellular band)
- 144 MHz: 136 ~ 199.995 MHz
- 300 MHz: 300 ~ 399.995 MHz

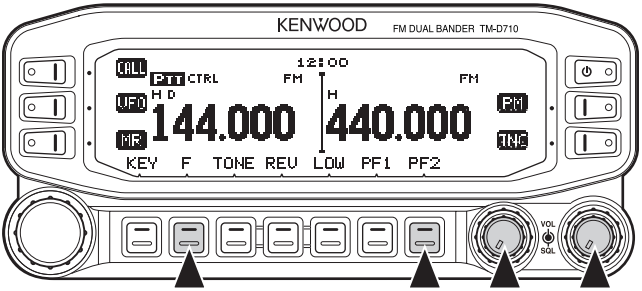

SELECTING AN OPERATING MODE

There are 3 operating modes available to choose from: VFO mode, Memory Channel mode, and Call Channel mode.

■ VFO Mode

VFO mode allows you to manually change the operating frequency.

1 Press **[VFO]** to enter VFO mode.

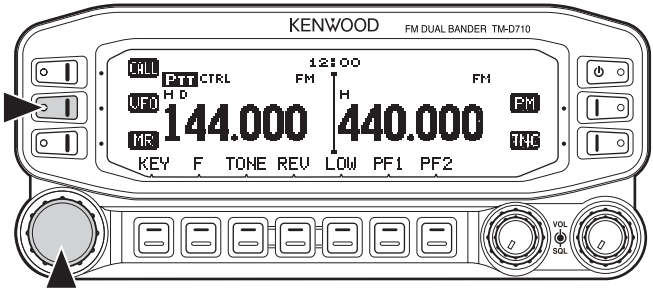

2 Rotate the **Tuning** control to select your desired operating frequency.

- You can also adjust the frequency by using the microphone **[UP]/[DWN]** keys.
- The default step frequency for the **Tuning** control varies according to the type and operating band:

Type	144 MHz	430/440 MHz
K	5 kHz	25 kHz
E	12.5 kHz	25 kHz
M4	10 kHz	10 kHz

- To adjust the frequency by a larger amount, you can press the **Tuning** control to enter MHz mode. While in MHz mode, rotate the **Tuning** control to adjust the frequency in steps of 1 MHz. Press the **Tuning** control again to exit MHz mode and adjust the frequency using the normal step frequency.

■ Memory Channel Mode

Memory Channel mode allows you to quickly select a frequently used frequency and related data which you have saved in the transceiver memory.

1 Press **[MR]** to enter Memory Channel mode.

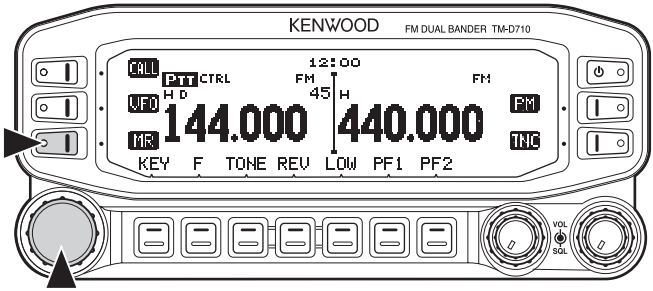

2 Rotate the **Tuning** control to select your desired Memory channel.

■ Call Channel Mode

Call Channel mode allows you to quickly select a preset channel to allow immediate calls on that frequency. The Call channel can be conveniently used as an emergency channel within your group.

1 Select your desired band (A or B).

- The Call channel has a dedicated frequency for both bands A and B. The default frequency for band A is 144 MHz. The default frequency for band B is 430/440 MHz.

2 Press **[CALL]** to enter Call Channel mode.

- The CALL icon appears on the display.

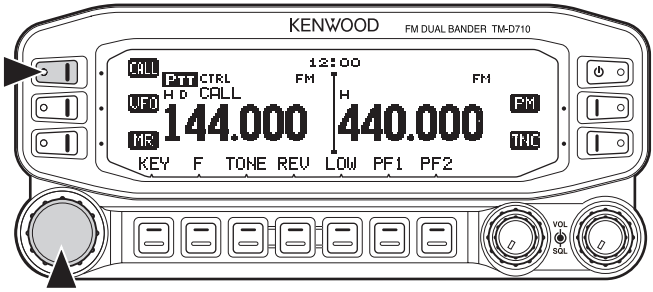

3 Press **[CALL]** again to return to your previous operating frequency.

TRANSMITTING

1 Select your desired band and frequency/channel.

2 Press and hold the microphone **[PTT]** switch and speak into the microphone to transmit.

- The ON AIR icon and the RF power meter appear on the display for the selected transmit band. The RF power meter shows the relative transmit output power.
- The H/ M/ L icon(s) appear on the display, depending on what output power you have selected.
- Speak into the microphone in your normal voice, while keeping the microphone approximately 5 cm from your mouth. Speaking too close to the microphone or too loudly may increase distortion and reduce intelligibility of your signal at the receiving station.

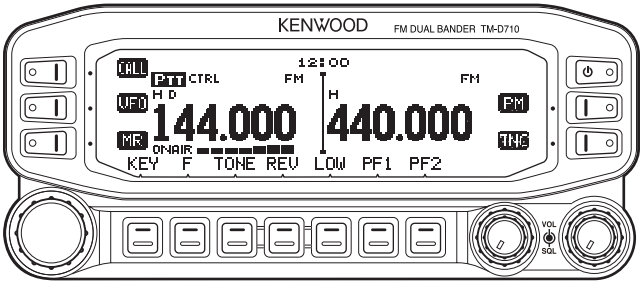

3 When you finish speaking, release the **[PTT]** switch.

Note: When the transceiver overheats because of ambient high temperature or continuous transmission, the protective circuit may function to lower transmit output power.

Many functions on this transceiver are selected or configured through the Menu instead of physical controls. Once you become familiar with the Menu system, you will appreciate the versatility it offers.

MENU ACCESS

1 Press **[F], Tuning** control to access the Menu.

- The setup category name appears on the display.

2 Rotate the **Tuning** control to select your desired setup category.

3 Press the **Tuning** control to set up the current category.

- The Menu name and number appears on the display.

4 Rotate the **Tuning** control to select your desired Menu.

5 Press the **Tuning** control to set up the current Menu.

6 Rotate the **Tuning** control to select your desired value for the selected Menu.

7 Press the **Tuning** control to set the selected value.

8 Repeat steps 2 to 7 to set up additional Menus.

- Press **[ESC]** at any time to exit Menu mode.
- Press **[BACK]** at any time to cancel the Menu setup and return to the Menu selection.

MENU CONFIGURATION

AUDIO				
Menu No.	**Display**	**Description**	**Setting Values**	**Default Setting**
000	KEY BEEP	Beep sound	OFF/ ON	ON
001	BEEP VOLUME	Beep volume level	LEVEL 1 ~ LEVEL 7	LEVEL 5
002	EXT.SPEAKER	External speaker output mode	MODE 1/ MODE 2	MODE 1
003 [1]	ANNOUNCE	Voice announcement mode	OFF/ AUTO/ MANUAL	AUTO
004 [1]	ANNOUNCE LANGUAGE	Voice announcement language	ENGLISH/ JAPANESE	ENGLISH
005 [1]	ANNOUNCE VOLUME	Voice announcement volume	LEVEL 1 ~ LEVEL 7	LEVEL 5
006 [1]	ANNOUNCE SPEED	Voice announcement speed	SPEED 0 ~ SPEED 4	SPEED 1
007 [1]	PLAYBACK REPEAT	Recording playback repeat	OFF/ ON	OFF
008 [1]	PLAYBACK INTERVAL	Playback repeat interval time	0 ~ 60 s	10 s
009 [1]	CONTINUOUS RECORDING	Conversation recording	OFF/ ON	OFF

TX/RX				
Menu No.	**Display**	**Description**	**Setting Values**	**Default Setting**
100	PROGRAMMABLE VFO	Programmable VFO setup	Varies with the selected frequency band	–
101	STEP	Step frequency	Varies with the selected frequency band	–
102	MODULATION	Modulation/demodulation mode	Varies with the selected frequency band	–
103	VHF AIP	VHF band AIP	OFF/ ON	OFF
104	UHF AIP	UHF band AIP	OFF/ ON	OFF
105	S-METER SQUELCH	S-meter squelch	OFF/ ON	OFF
106	S-METER SQL HANGUP TIME	S-meter squelch hang up time	OFF/ 125/ 250/ 500 ms	OFF
107	MUTE HANGUP TIME	Mute hang up time setup	OFF/ 125/ 250/ 500/ 750/ 1000 ms	OFF

TX/RX				
Menu No.	**Display**	**Description**	**Setting Values**	**Default Setting**
108	BEAT SHIFT	Beat shift	OFF/ ON	OFF
109	TOT	Time-out timer	3/ 5/ 10 min	10 min
110 [2]	WEATHER ALERT	Weather alert	OFF/ ON	OFF

MEMORY				
Menu No.	**Display**	**Description**	**Setting Values**	**Default Setting**
200	MEMORY NAME	Memory name setup	Up to 8 characters	–
201	RECALL METHOD	Memory channel recall method	ALL BANDS/ CURRENT	ALL BANDS
202	LOCKOUT	Memory channel lockout	OFF/ ON	OFF
203	GROUP LINK	Memory group link registration	Up to 10 digits (0 ~ 9)	–
204	EchoLink MEMORY	EchoLink memory setting	Up to 8 characters for EchoLink memory name Up to 8 digits for DTMF code	–
205	EchoLink SPEED	EchoLink memory transmission speed	FAST/ SLOW	FAST

DTMF				
Menu No.	**Display**	**Description**	**Setting Values**	**Default Setting**
300	DTMF HOLD	DTMF transmission hold	OFF/ ON	OFF
301	DTMF MEMORY	DTMF memory	Up to 8 characters for DTMF memory name Up to 16 digits for DTMF code	–
302	DTMF SPEED	DTMF memory transmission speed	FAST/ SLOW	FAST
303	DTMF PAUSE	DTMF pause code time	100/ 250/ 500/ 750/ 1000/ 1500/ 2000 ms	500 ms
304	DTMF KEY LOCK	DTMF key lock	OFF/ ON	OFF

REPEATER				
Menu No.	Display	Description	Setting Values	Default Setting
400	OFFSET FREQUENCY	Offset frequency	See explanation	–
401 [3]	AUTO REPEATER OFFSET	Auto Repeater Offset	OFF/ ON	ON
402	1750 TX HOLD	Transmission hold when transmitting a 1750 Hz tone	OFF/ ON	OFF
403 [2]	REPEATER MODE	Repeater mode	CROSS BAND/ LOCKED TX: A-BAND/ LOCKED TX: B-BAND	CROSS BAND
404 [2]	REPEATER TX HOLD	Repeater transmission hold	ON/ OFF	OFF
405 [2]	REPEATER ID	Repeater ID registration	Up to 12 characters	–
406 [2]	REPEATER ID TX	Repeater ID transmission	OFF/ MORSE/ VOICE	OFF

AUX				
Menu No.	Display	Description	Setting Values	Default Setting
500	POWER ON MESSAGE	Power on message setup	Up to 8 characters	HELLO
501	BRIGHTNESS	Display brightness	OFF/ LEVEL 1 ~ LEVEL 8	LEVEL 8
502	AUTO BRIGHTNESS	Display auto brightness	OFF/ ON	OFF
503	BACKLIGHT COLOR	Backlight color	AMBER/ GREEN	AMBER
504	CONTRAST	Display contrast	LEVEL 1 ~ LEVEL 16	LEVEL 8
505	DISPLAY REVERSE MODE	Display reverse mode	POSITIVE/ NEGATIVE	POSITIVE
507	PANEL PF1	PF1 key programmable function value	See explanation	WX CH (K type) FRQ.BAND (E/ M4 types)
508	PANEL PF2	PF2 key programmable function value	See explanation	CTRL
509	MIC PF1(PF)	Microphone PF1 key programmable function value	See explanation	A/B

AUX				
Menu No.	Display	Description	Setting Values	Default Setting
510	MIC PF2(MR)	Microphone PF2 key programmable function value	See explanation	MR
511	MIC PF3(VFO)	Microphone PF3 key programmable function value	See explanation	VFO
512	MIC PF4(CALL)	Microphone PF4 key programmable function value	See explanation	CALL (K/ M4 types) 1750 (E type)
513	MIC KEY LOCK	Microphone key lock	OFF/ ON	OFF
514	SCAN RESUME	Scan resume method	TIME/ CARRIER/ SEEK	TIME
515	VISUAL SCAN	Number of Channels for Visual Scan	MODE 1: 31ch/ MODE 2 : 61ch/ MODE 3 : 91ch/ MODE 4 : 181ch	MODE 2 : 61ch
516	APO	Auto Power Off time	OFF/ 30/ 60/ 90/ 120/ 180 (minutes)	OFF
517	EXT. DATA BAND	External TNC data band type	A-BAND/ B-BAND/ TX:A-BAND RX: B-BAND/ RX:A-BAND TX: B-BAND	A-BAND
518	EXT. DATA SPEED	External TNC data communications speed	1200/ 9600 bps	1200 bps
519	PC PORT BAUDRATE	PC terminal baud rate speed	9600/ 19200/ 38400/ 57600 bps	9600 bps
520	SQC SOURCE	SQC output type	OFF/ BUSY/ SQL/ TX/ BUSY or TX/ SQL or TX	BUSY or TX
521	AUTO PM STORE	Automatic PM entry	OFF/ ON	ON
522 [2]	REMOTE ID	Personal Identification Number	000 ~ 999	000
523 [2]	REMOTE ANSWER BACK	Answer back	OFF/ ON	ON
524	DATE	Date	See explanation	–

AUX				
Menu No.	Display	Description	Setting Values	Default Setting
525	TIME	Clock time	See explanation	–
526	TIME ZONE	Time zone	UTC + 14:00 ~ UTC – 14:00	UTC
527	DISPLAY PARTITION BAR	Display partition bar	OFF/ ON	ON
528	COM PORT BAUDRATE	COM terminal baud rate speed	9600/ 19200/ 38400/ 57600 bps	9600 bps
529	INT. DATA BAND (PACKET)	Internal TNC data band (PACKET)	A-BAND/ B-BAND/ TX:A-BAND RX: B-BAND/ RX:A-BAND TX: B-BANDS	A-BAND

APRS				
Menu No.	Display	Description	Setting Values	Default Setting
600	BASIC SETTING			
	MY CALLSIGN	Call sign entry	Up to 9 characters	NOCALL
	BEACON TYPE	Beacon type	APRS/ NAVITRA	APRS
601	INTERNAL TNC			
	DATA BAND	Data band type	A-BAND/ B-BAND/ TX:A-BAND RX: B-BAND/ RX:A-BAND TX: B-BAND	A-BAND
	DATA SPEED	Data communications speed	1200/ 9600 bps	1200 bps
	DCD SENSE	DCD sense type	D or RxD BAND/ BOTH BAND/ IGNORE DCD	D or RxD BAND
	TX DELAY	TX delay time	100/ 150/ 200/ 300/ 400/ 500/ 750/ 1000 ms	200 ms
602	GPS PORT			
	BAUD RATE	Baud rate speed	2400/ 4800/ 9600 bps	4800 bps
	INPUT	GPS data input type	OFF/ GPS/ WEATHER(Davis)/ WEATHER (PeetBros)	OFF
	OUTPUT	GPS data output type	OFF/ WAYPOINT/ DGPS	OFF
603	WAYPOINT			
	FORMAT	Way point format	NMEA/ MAGELLAN/ KENWOOD	NMEA
	NAME	Way point name	6-CHAR ~ 9-CHAR	6-CHAR
	OUTPUT	Way point output type	ALL/ LOCAL/ FILTERED	ALL
604	COM PORT			
	OUTPUT	COM port output	OFF/ ON	OFF

APRS				
Menu No.	Display	Description	Setting Values	Default Setting
605	MY POSITION			
	NAME	Name entry	See explanation	–
	LATITUDE	Latitude entry	See explanation	–
	LONGITUDE	Longitude entry	See explanation	–
606	BEACON INFORMATION			
	SPEED	Speed information setup	OFF/ ON	ON
	ALTITUDE	Altitude information setup	OFF/ ON	ON
	POSITION AMBIGUITY	Position ambiguity mode	OFF/ 1-DIGIT ~ 4-DIGIT	OFF
607	POSITION COMMENT			
	POSITION COMMENT	Position comment	See explanation	Off Duty
608	STATUS TEXT			
	TEXT	Status text	See explanation	–
	TX RATE	Status text TX rate	OFF/ 1/1 ~ 1/8	OFF
609	PACKET FILTER			
	POSITION LIMIT	Position limit	See explanation	OFF
	TYPE	Packet filter type	WHEATHER/ DIGI/ MOBILE/ OBJECT/ NAVITRA/ OTHERS	Checked all
610	STATION ICON			
	STATION ICON	Station icon	See explanation	W (KENWOOD icon)
611	BEACON TX ALGORITHM			
	METHOD	Method	MANUAL/ PTT/ AUTO	MANUAL
	INITIAL INTERVAL	Initial interval time	0.2/ 0.5/ 1/ 3/ 5/ 10/ 20/ 30 min	3 min
	DECAY ALGORITHM	Decay algorithm	OFF/ ON	ON
	PROPORTIONAL PATHING	Proportional pathing	OFF/ ON	ON

APRS				
Menu No.	Display	Description	Setting Values	Default Setting
612	PACKET PATH			
	TYPE	Packet path type	See explanation	
613	NETWORK			
	NETWORK	Network	Up to 9 characters	APK102
614	VOICE ALERT			
	VOICE ALERT	Voice alert	OFF/ ON	OFF
	CTCSS FREQUENCY	CTCSS frequency	See explanation	100.0 Hz
615	WEATHER STATION			
	TX	Weather TX	OFF/ ON	OFF
	TX INTERVAL	Weather TX interval time	5/ 10/ 30 min	5 min
616	DIGIPEAT (MY CALL)			
	DIGIPEAT	Digipeat	OFF/ ON	OFF
617	UI CHECK			
	TIME	UI check time	0 ~ 250 sec	28 sec
618	UIDIGI			
	UIDIGI	UIDIGI	See explanation	
	ALIASES			
619	UIFLOOD			
	UIFLOOD	UIFLOOD	See explanation	
	ALIASES			
	SUBSTITUTION			
620	UITRACE			
	UITRACE	UITRACE	See explanation	
	ALIASES			
621	USER PHRASES			
	USER PHRASES	User phrases	See explanation	
622	AUTO MESSAGE REPLY			
	REPLY	Reply message	OFF/ ON	OFF
	TEXT	Auto message reply text	Up to 50 characters	–
	REPLY TO	Reply to	Up to 9 characters	✳

APRS				
Menu No.	Display	Description	Setting Values	Default Setting
623	GROUP FILTERING			
	MESSAGE	Message group	Up to 59 characters	ALL, QST, CQ, KWD
	BLN	BLN group	Up to 29 characters	–
624	SOUND			
	RX BEEP	RX Beep	OFF/ MESSAGE ONLY/ MINE/ ALL NEW/ ALL	ALL
	SPECIAL CALL	Special call	Up to 9 characters	–
	APRS VOICE	APRS voice	OFF/ ON	ON
625	INTERRUPT DISPLAY			
	DISPLAY AREA	Display area	OFF/ HALF/ ENTIRE	ENTIRE
	AUTO BRIGHTNESS	Auto brightness	OFF/ ON	ON
	CHANGE COLOR	Change color	OFF/ ON	ON
626	DISPLAY UNIT 1			
	SPEED, DISTANCE	Speed/ distance	mi/h mile/ Km/h mile/ Knots/ nm	mi/h mile
	ALTITUDE, RAIN	Altitude/ rain	feet/inch/ m/nm	feet/inch
	TEMPERATURE	Temperature	°F/ °C	°F
627	DISPLAY UNIT 2			
	POSITION	Position format	dd°mm. mm'/ dd°mm' ss. s"	dd°mm. mm'
	GRID FORMAT	Grid format	MAIDENHEAD GRID/ SAR GRID (CONV)/ SAR GRID (CELL)	MAIDENHEAD GRID
628	NAVITRA GROUP			
	GROUP MODE	Group mode	OFF/ ON	OFF
	GROUP CODE	Group code	3 characters	000
629	NAVITRA MESSAGE			
	MESSAGE	Message	Up to 20 characters	–

SKY CMD				
Menu No.	**Display**	**Description**	**Setting Values**	**Default Setting**
700 [2]	COMMANDER CALLSIGN	Commander call sign	Up to 9 characters	NOCALL
701 [2]	TRANSPORTER CALLSIGN	Transporter call sign	Up to 9 characters	NOCALL
702 [2]	TONE FREQUENCY	Tone frequency	See explanation	88.5Hz
703 [2]	SKY COMMAND	SKY command	OFF/ COMMANDER/ TRANSPORTER	OFF

AUX 2				
Menu No.	**Display**	**Description**	**Setting Values**	**Default Setting**
998	POWER ON PASSWORD	Power on password	OFF/ ON	OFF
999	RESET	Reset	VFO RESET/ PARTIAL RESET/ PM RESET/ FULL RESET	VFO RESET

[1] Available only when the optional VGS-1 unit is installed in the transceiver.
[2] Available only for K type models.
[3] Available only for K and E types models.

CHARACTER ENTRY

Certain menus require you to enter characters, such as the power on message and memory names. When character entry is required, a cursor will appear on the display.

1 Press the **Tuning** control.

- The cursor will blink.

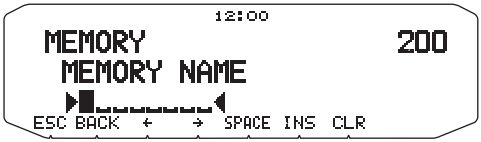

2 Rotate the **Tuning** control to select your desired character.

3 Press the **Tuning** control to set the selected character.

- The cursor will move to the next digit.

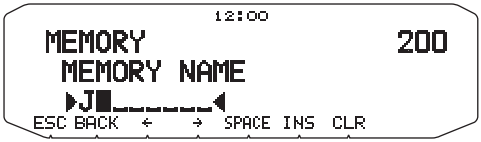

- You can move the cursor to the left or right by pressing **[←]** or **[→]**.
- You can insert one space by pressing **[SPACE]**.
- You can insert a character by pressing **[INS]**.
- You can delete the selected character by pressing **[CLR]**.

4 Repeat steps 2 and 3 to enter the remaining characters.

- Press **[ESC]** at any time to exit Menu mode.
- Press **[BACK]** at any time to cancel the Menu setup and return to the Menu selection.

■ Microphone Keypad Character Entry

The microphone keys can also be used to enter characters. Refer to the table below for characters corresponding to microphone keys.

Key	Character Display (with each press of the key)				Key	Character Display (with each press of the key)			
1	Q	Z	1		**7**	P	R	S	7
2	A	B	C	2	**8**	T	U	V	8
3	D	E	F	3	**9**	W	X	Y	9
4	G	H	I	4	**0**	(space)		0	
5	J	K	L	5	**∗**	Not used			
6	J	K	L	6	**#**	–	/	@	

For a memory name, status text, and message:

Key	Character Display (with each press of the key)						
1	q	z	1	Q	Z		
2	a	b	c	2	A	B	C
3	d	e	f	3	D	E	F
4	g	h	i	4	G	H	I
5	j	k	l	5	J	K	L
6	m	n	o	6	M	N	O
7	p	r	s	7	P	R	S
8	t	u	v	8	T	U	V
9	w	x	y	9	W	X	Y
0	(space)	0					
∗	Not used						
#	?	!	’	.	,	–	/
	&	#	%	(	)	<	>
	;	:	”	@			

The microphone **[A]** ~ **[D]** keys have special functions assigned to them:

[A]: Functions the same as **[CLR]**

[B]: Functions the same as **[←]**

[C]: Functions the same as **[→]**

[D]: Functions the same as the **Tuning** control

The following options are available for use with this transceiver:

- MC-45 Microphone
- MC-59 Microphone with keypad
- MCP-2A Memory Control Program (web download software)
- MJ-88 Microphone Plug Adapter
- MJ-89 Modular Plug Microphone Switch
- PG-2N DC Cable (2 m)
- PG-20 DC Cable (7 m)
- PG-3B Noise Filter
- PG-5A Data Cable
- PG-5G Programming Interface Cable (2 m)
- PG-5H PC Interface Cable Kit (2 m)
- PG-5F Extension Cable Kit (4 m)
- PS-33 DC Power Supply
- PS-53 DC Power Supply
- SP-50B External Speaker
- VGS-1 Voice Guide & Storage Unit

Note: Optional accessories for use with this transceiver may change, post-production. (New options may become available and/or current options may be discontinued.) Please refer to the options catalog(s) for applicable transceivers.

MEMORY CONTROL PROGRAM MCP-2A

The following functions can be set only by using the MCP-2A software:

- SQC active condition
- Microphone sensitivity level
- 10 MHz mode selection
- Power on password value

Using the MCP-2A software, you can:

- View memory channel groups
- Name memory groups
- Name PM channels
- Save/load settings
- Read exported TravelPlus for Repeaters™ files issued from the ARRL™ (There are some version restrictions; refer to the help text of the MCP-2A.)
- Print/export memory and various settings in html

(TravelPlus for Repeaters is a trademark of ARRL.)

To download the MCP-2A software, go to:
http://www.kenwood.com/i/products/info/amateur/software_download.html

Note: This URL may change without notice.

■ Using the MCP-2A Software

1. Follow the directions of the installer to install the software.
2. Set up the PC COM port and baud rate.
3. The transceiver data is read from the MCP-2A software.
4. Select your desired settings, then write the data to the transceiver.

CONNECTING THE PG-5G/ PG-5H INTERFACE CABLES

The PG-5G package comes with cable ② (below).

The PG-5H packages comes with cables ① and ② (below).

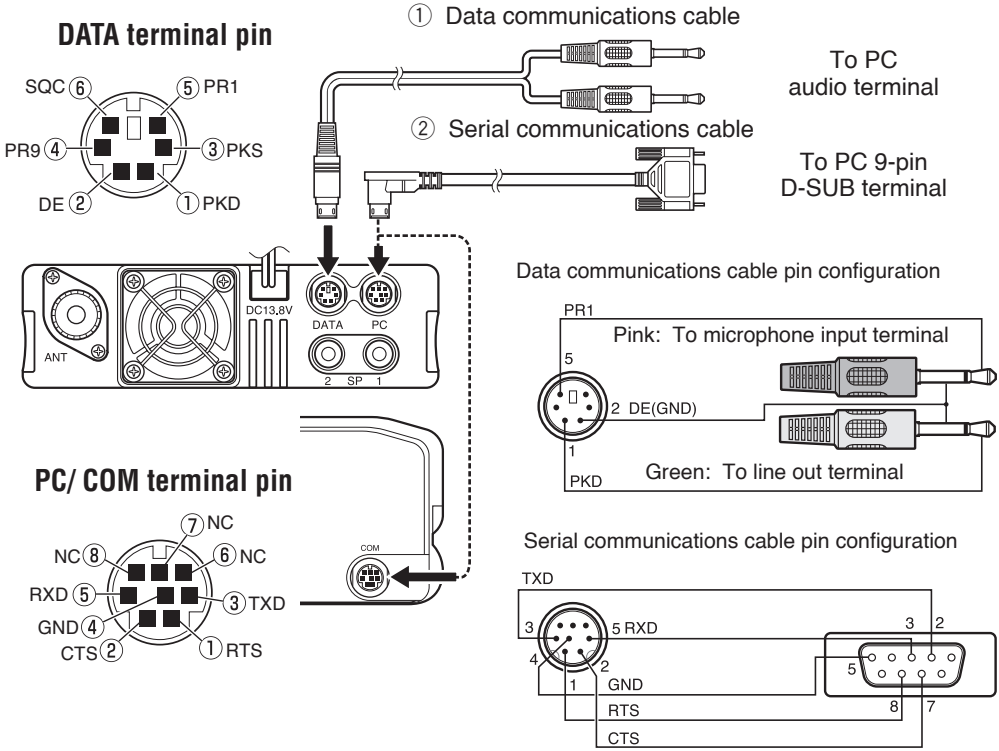

Note: When connecting the regular cable in your vehicle, the terminal may disconnect due to vibrations. Be sure to lock the cable in place.

CONNECTING THE PG-5F EXTENSION CABLE

Using two PG-5F kits, you can extend the cables to the maximum length.
(Components marked with an asterisk * are included in the PG-5F kit.)

■ Connecting Using a Single Extension Kit

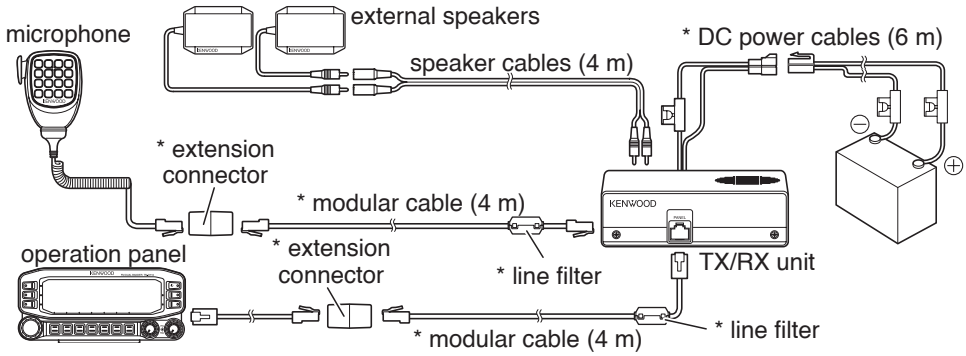

■ Connecting Using Two Extension Kits

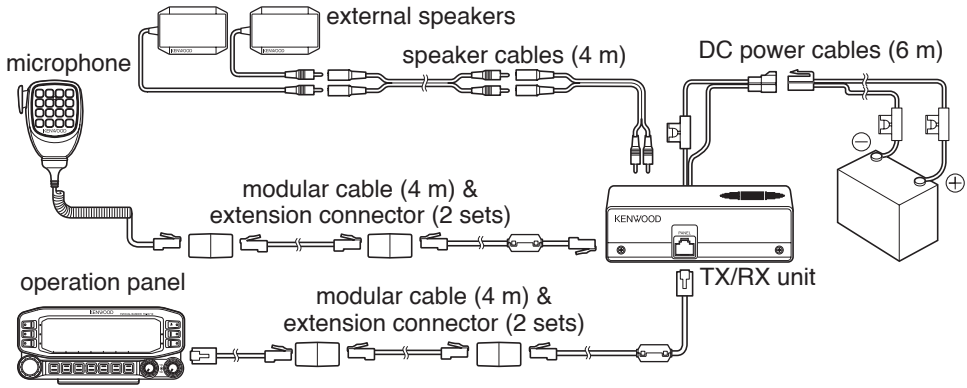

■ Installing the Line Filter

Install the line filter approximately 3 cm from the connector which attaches to the TX/RX unit.

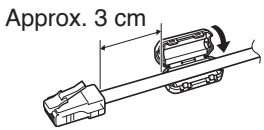

■ Affixing the Microphone Cable

Lock the microphone cable down as shown in the illustration.

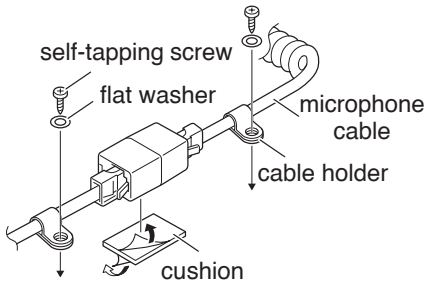

INSTALLING THE VGS-1 UNIT

Follow the instructions below to install the VGS-1 unit.

Note: The VGS-1 is sold depending upon area.

1 Remove the 8 screws from the cover of the base unit, then remove the cover itself from the unit.

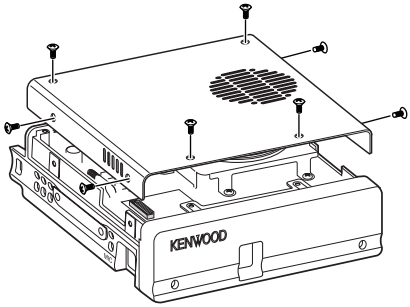

2 From the 5 black cushions supplied with the VGS-1, select the thickest rectangular cushion (20 x 30 x 12 mm) and attach it to the top surface of the VGS-1 unit.

- To prevent interference to the terminal of the VGS-1, ensure that you attach the thick square cushion to the base plate surface.

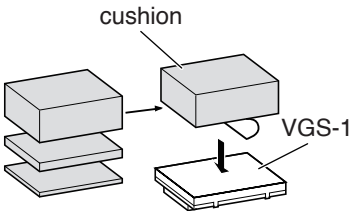

3 From the remaining cushions, select the thickest square cushion (21 x 21 x 2.5 mm) and attach it to the printed circuit board.

- The remaining cushions are not used with this transceiver.
- Ensure that the cushion is placed within the guidelines on the PCB.

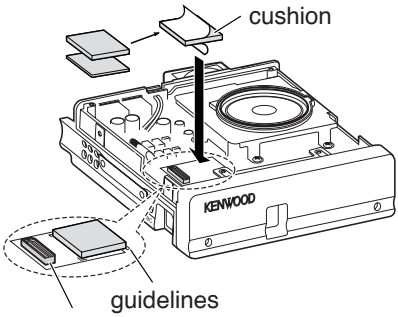

connector

4 Insert the VGS-1 unit into the connector on the transceiver.

- Press down on the top of the VGS-1 unit to ensure that it is securely attached to the connector.

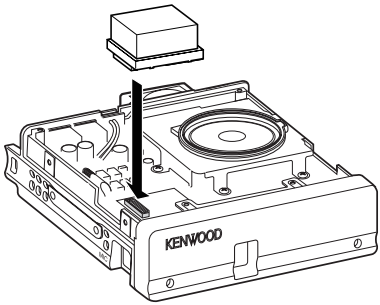

5 Replace the cover on the base unit and secure it using the 8 screws.

GENERAL INFORMATION

This product has been factory aligned and tested to specification before shipment. Attempting service or alignment without factory authorization can void the product warranty.

SERVICE

When returning this product to your dealer or service center for repair, pack it in its original box and packing material. Include a full description of the problem(s) experienced. Include your telephone number along with your name and address in case the service technician needs to contact you; if available, also include your fax number and e-mail address. Don't return accessory items unless you feel they are directly related to the service problem.

You may return this product for service to the authorized **Kenwood** dealer from whom you purchased it, or any authorized **Kenwood** service center. Please do not send subassemblies or printed circuit boards; send the complete product. A copy of the service report will be returned with the product.

SERVICE NOTE

If you desire to correspond on a technical or operational problem, please make your note legible, short, complete, and to the point. Help us help you by providing the following:

- Model and serial number of equipment
- Question or problem you are having
- Other equipment in your station pertaining to the problem

CAUTION

Do not pack the equipment in crushed newspapers for shipment! Extensive damage may result during rough handling or shipping.

Note:

- Record the date of purchase, serial number and dealer from whom this product was purchased.
- For your own information, retain a written record of any maintenance performed on this product.
- When claiming warranty service, please include a photocopy of the bill of sale or other proof-of-purchase showing the date of sale.

CLEANING

To clean the case of this product, use a neutral detergent (no strong chemicals) and a damp cloth.

TROUBLESHOOTING

The problems described in this table are commonly encountered operational malfunctions and are usually not caused by circuit failure.

Problem	Probable Cause	Corrective Action
The transceiver will not power up after connecting a 13.8 V DC power supply and pressing [⏻]. Nothing appears on the display.	**1** The power cable was connected backwards. **2** One or more of the power cable fuses are open.	**1** Connect the supplied DC power cable correctly (red to + terminal and black to – terminal). **2** Look for the cause of the blown fuse(s). After inspecting and correcting any problems, install a new fuse(s) with the same ratings.
The frequency cannot be selected by turning the **Tuning** control or by pressing microphone **[UP]/[DWN]**.	Memory Recall was selected.	Press **[VFO]**.
Most keys and the **Tuning** control do not function.	**1** One of the Lock functions is ON. **2** The transceiver is in Channel Display mode.	**1** Unlock all of the Lock functions. **2** With the transceiver power OFF, press **[LOW] + Power ON** to exit Channel Display mode.
Memory channels cannot be selected by turning the **Tuning** control or by pressing microphone **[UP]/[DWN]**.	No data has been stored in any Memory channel.	Store data in some Memory channels.
You cannot transmit even though you are pressing **[PTT]**.	**1** The microphone plug was not inserted completely into the transceiver. **2** You selected a transmit offset that places the transmit frequency outside the allowable range. **3** The external TNC is transmitting.	**1** Switch the power OFF, then insert the microphone plug until the locking tab clicks in place. **2** Turn the offset shift function OFF. **3** Press **[PTT]** after the TNC has finished transmitting.

Problem	Probable Cause	Corrective Action
“MCP ERR” appears on the display. (MCP-2A communications error)	**1** Ensure that the connection between the TM-D710 and the PC is correct.	**1** Checking connection
	2 While performing a large amount of processing on the PC.	**2** Shut down other software that you may be running.
	3 EchoLink mode turns ON.	**3** Turn EchoLink mode OFF.
	4 There are other reasons why communications was not possible.	**4** Turn the TM-D710 power source OFF and ON, one time.

Concerning the received frequency display, an unmodulated signal may be received. This is according to the set intrinsic frequency form.

	<A band>		<B band>		
VxU reception	(144 MHz + 45.05 MHz) x 2	–	(430 MHz - 49.95 MHz)	=	45.05 MHz, 49.95 MHz
	(144 MHz + 45.05 MHz) x 4	–	(430 MHz - 49.95 MHz) x 2	=	45.05 MHz, 49.95 MHz
UxV reception	(430 MHz - 45.05 MHz)	–	(144 MHz + 49.95 MHz) x 2	=	45.05 MHz, 49.95 MHz
	(430 MHz - 45.05 MHz) x 2	–	(144 MHz + 49.95 MHz) x 4	=	45.05 MHz, 49.95 MHz

Specifications are subject to change without notice due to advancements in technology.

General				TM-D710A K Type	TM-D710E E Type	TM-D710A M4 Type
Guaranteed range	Band A & B	TX & RX		144 ~ 148 MHz	144 ~ 146 MHz	
				438 ~ 450 MHz	430 ~ 440 MHz	
Frequency range	Band A	RX		118 ~ 524 MHz		—
	Band B			136 ~ 524 MHz		—
				800 ~ 1300 MHz (K type: excluding cellular band)		—
Mode				F1D/ F2D/ F3E		
Antenna impedance				50 Ω		
Operating temperature range				–20°C ~ +60°C (–4°F ~ +140°F)		
Power requirement				13.8 V DC ±15% (Negative ground)		
Frequency stability				Within ±5 ppm (–10°C ~ +50°C)		
Current	TX	VHF	Hi	Less than 13.0 A		—
			Mid	Less than 5.5 A		Less than 9.0 A
			Low	Less than 4.0 A		
		UHF	Hi	Less than 13.0 A		—
			Mid	Less than 6.5 A		Less than 9.0 A
			Low	Less than 5.0 A		
	RX			Less than 1.2 A (at 2W audio output)		
Dimensions (W x H x D)	Without projections			Operation panel: 155 x 70 x 38 mm (6.20" x 2.80" x 1.52") TX/ RX unit: 140 x 43 x 142 mm (5.60" x 1.72" x 5.68")		
	With projections			Operation panel: 156 x 71 x 56 mm (6.24" x 2.84" x 2.24") TX/ RX unit: 140 x 44 x 158 mm (5.60" x 1.76" x 6.32")		
Weight (approx.)				Operation panel: 0.3 kg (0.66 lbs) TX/ RX unit: 1.2 kg (2.64 lbs)		

Transmitter		TM-D710A K Type	TM-D710E E Type	TM-D710A M4 Type
RF power output	Hi	50 W		—
	Mid	Approx. 10 W		25 W
	Low	Approx. 5 W		
Modulation		Reactance modulation		
Maximum frequency deviation		Within ±5 kHz		
Spurious radiation		Less than –60 dB		
Modulation distortion (300 Hz ~ 3 kHz)		Less than 3%		
Microphone impedance		600 Ω		

Receiver		TM-D710A K Type	TM-D710E E Type	TM-D710A M4 Type
Circuitry		Double super heterodyne		
Intermediate frequency	1st (Band A/ Band B)	45.05 MHz/ 49.95 MHz		
	2nd (Band A/ Band B)	455 kHz/ 450 kHz		
Sensitivity (144, 430/440 MHz band)		Less than 0.16 μV (-16 dBμ)		
Squelch sensitivity (144, 430/440 MHz band)		Less than 0.1 μV (-20 dBμ)		
Selectivity	–6 dB	More than 11 kHz		
	–50 dB	Less than 30 kHz		
Low frequency output (8 Ω)		More than 2 W (at 5% distortion)		

Sensitivity (approx.) <excluding 144, 430/440 MHz band>

Frequency range	Band A		Band B
	FM: 12 dB SINAD	AM: 10 dB S/N	FM: 12 dB SINAD
118 ~ 135.995 MHz	0.32 μV (-10 dBμ)	0.40 μV (-8 dBμ)	—
136 ~ 173.995 MHz	0.32 μV (-10 dBμ)	0.40 μV (-8 dBμ)	0.32 μV (-10 dBμ)
174 ~ 229.995 MHz	0.40 μV (-8 dBμ)	0.50 μV (-6 dBμ)	0.40 μV (-8 dBμ)
230 ~ 299.995 MHz	5.6 μV (15 dBμ)	5.6 μV (15 dBμ)	5.6 μV (15 dBμ)
300 ~ 349.995 MHz	1.0 μV (0 dBμ)	1.0 μV (0 dBμ)	1.0 μV (0 dBμ)
350 ~ 399.995 MHz	0.56 μV (-5 dBμ)	0.56 μV (-5 dBμ)	0.56 μV (-5 dBμ)
400 ~ 499.995 MHz	0.28 μV (-11 dBμ)	0.36 μV (-9 dBμ)	0.28 μV (-11 dBμ)
500 ~ 523.995 MHz	0.56 μV (-5 dBμ)	0.71 μV (-3 dBμ)	0.56 μV (-5 dBμ)
800 ~ 1239.99 MHz	—	—	7.08 μV (17 dBμ)
1240 ~ 1299.99 MHz	—	—	2.24 μV (7 dBμ)

KENWOOD

This file has been downloaded from:

www.UsersManualGuide.com

User Manual and User Guide for many equipments like mobile phones, photo cameras, monther board, monitors, software, tv, dvd, and othes..

Manual users, user manuals, user guide manual, owners manual, instruction manual, manual owner, manual owner's, manual guide, manual operation, operating manual, user's manual, operating instructions, manual operators, manual operator, manual product, documentation manual, user maintenance, brochure, user reference, pdf manual

Downloaded from: http://www.usersmanualguide.com/